FrelTec GmbH

Mathildenstr. 10A
82319 Starnberg
Germany

Thick Film Chip Resistor
SMD

© FrelTec GmbH

Please read cautions and warnings and important notes at the end of this document.

Part Number

015	05*	1001*	J*	T05**	D
Type	Size	Value	Tolerance	Packing	Wattage
015 : SMD Thick Film Chip Resistor	0A : 01005	The last digit is the multiplier	F : ±1%	T05: Tape and reel for 5k pc (7”reel)	A: 1/32W
	01 : 0201	which denotes the number of zero following	J : ±5%	T10: Tape and reel for 10k pc (7” reel)	U: 1/20W
	02 : 0402	0000=0Ohm		T15: Tape and reel for 15k pc (7” reel)	B: 1/16W
	03 : 0603		* not all combination is possible	T20: Tape and reel for 20k pc (7” reel)	C: 1/10W
	05 : 0805	Example:	** T20 for 1005 Paper Type, 2mm Pitch	E04: Tape and reel for 4k pc (7”reel)	D: 1/8W
	06 : 1206	97R6= 97,6Ohm	** T15 for 0201 Paper Type, 2mm Pitch	L20: Embossed tape and reel for 20k pcs (13”reel)	E: 1/4W
	10 : 1210	9760 = 976Ohm	** T10, for 0402, Paper Type, 2mm Pitch	L3´50: Embossed tape and reel for 50k pcs (13”reel)	H: 1/2W
	20 : 2010	1001 = 1kOhm	** T05 0603 to 1210 all Paper Type, 4mm Pitch		I: 3/4W
	25 : 2512	R976= 0,976Ohm	** E04 for 1812, 2010 and 2512 Embossed Plastic Type, 4mm Pitch		J: 1W
	12 : 1812	E24-Series is first digit “0”	Special reel size upon request: L50 for 0402 paper tape, 2mm Pitch L20 for 0603 to 1210 paper tape 4mm pitch		

All products according to RoHS (2015/863/EU)

FrelTec

© FrelTec® GmbH

Please read cautions and warnings and important notes at the end of this document.

THICK FILM CHIP RESISTORS

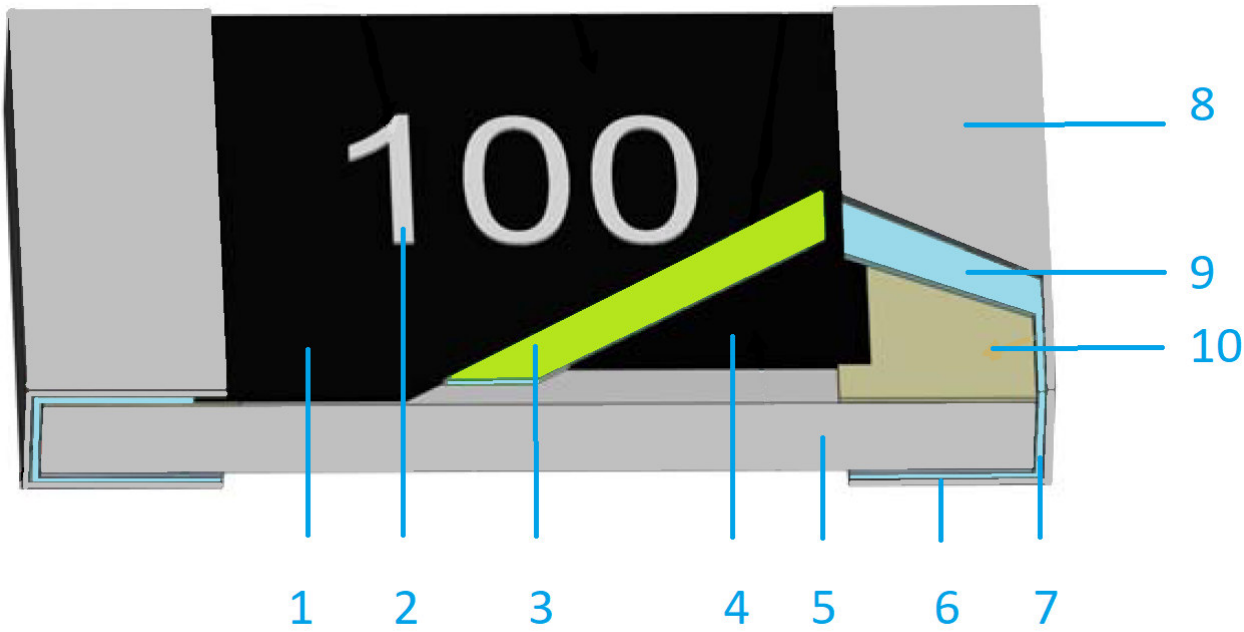

1	External Protective coating	6	Terminal outer electrode Sn
2	Marking	7	Terminal middle electrode Ni Barrier
3	Internal Protective coating	8	Terminal outer electrode Sn
4	Resistive element	9	Ni plating
5	High purity Al substrate	10	Termination inner plating Ag

Dimensions

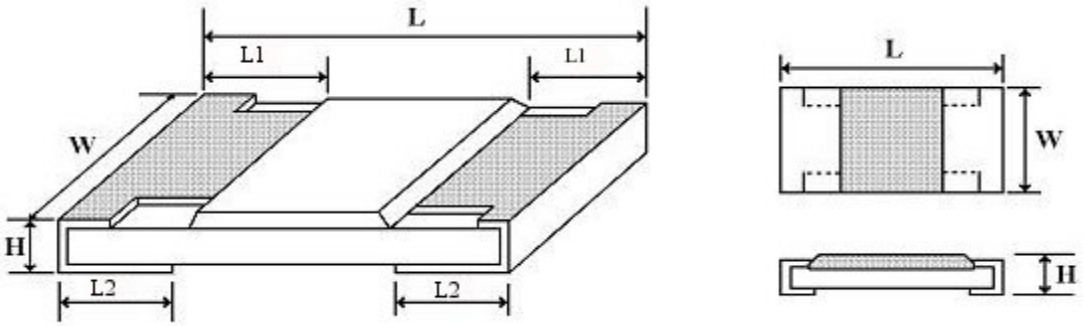

SIZE	L	W	L1	L2	H
01005	0,40 ± 0,02	0,20 ± 0,02	0,10 ± 0,03	0,10 ± 0,03	0,13 ± 0,02
0201	0,60 ± 0,03	0,30 ± 0,03	0,10 ± 0,05	0,15 ± 0,05	0,23 ± 0,03
0402	1,00 ± 0,10	0,50 ± 0,05	0,20 ± 0,10	0,25 ± 0,10	0,35 ± 0,05
0603	1,60 ± 0,10	0,80 ± 0,10	0,30 ± 0,20	0,30 ± 0,20	0,45 ± 0,10
0805	2,00 ± 0,15	1,25 + 0,15/- 0,10	0,40 ± 0,20	0,40 ± 0,20	0,55 ± 0,10
1206	3,10 ± 0,15	1,55 + 0,15/- 0,10	0,45 ± 0,20	0,45 ± 0,20	0,55 ± 0,10
1210	3,10 ± 0,10	2,60 ± 0,20	0,50 ± 0,25	0,50 ± 0,20	0,55 ± 0,10
2010	5,00 ± 0,10	2,50 ± 0,20	0,60 ± 0,25	0,50 ± 0,20	0,55 ± 0,10
2512	6,35 ± 0,10	3,20 ± 0,20	0,60 ± 0,25	0,50 ± 0,20	0,55 ± 0,10
1812	4,50 ± 0,20	3,20 ± 0,20	0,50 ± 0,20	0,50 ± 0,20	0,55 ± 0,20

(unit: mm)

© FrelTec® GmbH www.freltec.com
Please read cautions and warnings and important notes at the end of this document.

Power Derating Curve

For resistors operated in ambient temperatures above 70°C, power rating must be derated in accordance with the curve below. Operating temperature -55°C to +155°C

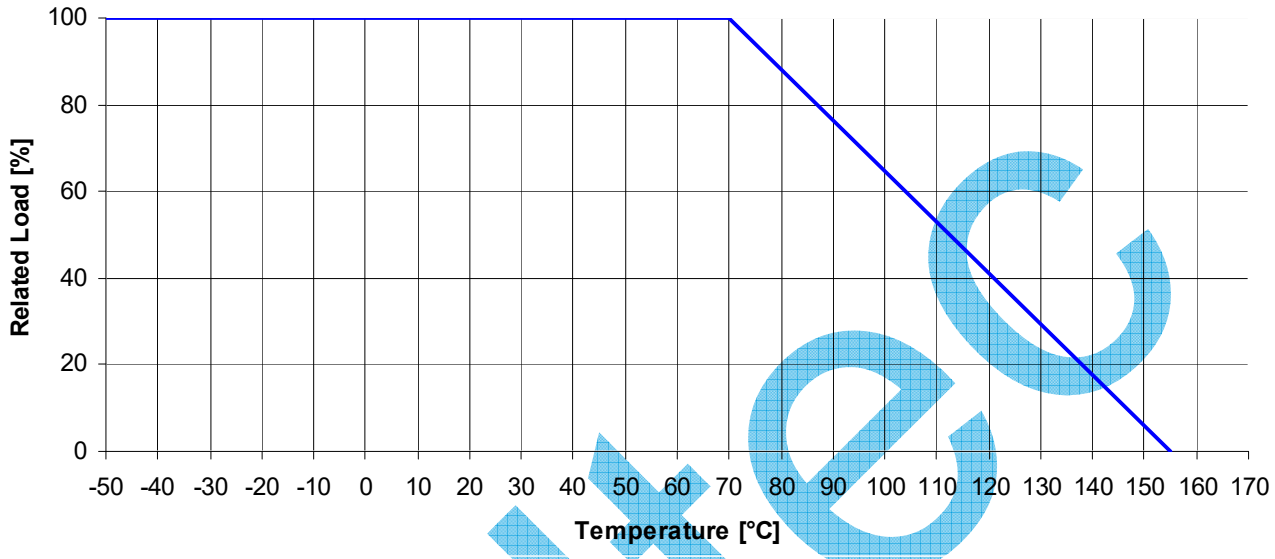

Voltage Rating:

The resistor shall have a DC continuous working voltage or an approximate sine-wave root-mean-square (RMS) alternating-current (AC) continuous working voltage at commercial line frequency and waveform corresponding to the power rating, as determined from the following:

RCWV= Rated DC or RMS AC continuous working voltage at commercial-line frequency and waveform [V]

P= Power rating [W] RCWV= $\sqrt{R \bullet P}$

R= Nominal resistance [Ω]

Note: Max. Working Voltage or √P x R whichever is lesser
Max. Overload Voltage or 2,5 √P x R whichever is lesser

Max. Working Voltage or $\sqrt{R \bullet P}$ whichever is lesser

Max. Overload Voltage or 2,5 $\sqrt{R \bullet P}$ whichever is lesser

FrelTec

© FrelTec® GmbH www.freltec.com
Please read cautions and warnings and important notes at the end of this document.

THICK FILM CHIP RESISTORS

015 *Series*

GENERAL PURPOSE CHIP RESISTORS

Size	Power Rating at 70°C	Max. Working Voltage	Max. Overload Voltage	Di-electric Withstanding Voltage	Tempera-ture Coefficient [TCR; ppm/°C]	Resistance Range [Ω] D(±0,5%) E96+E24	Resistance Range [Ω] F(±1%) E96+E24, G(±2%) E24, J(±5%) E24	Jumper Rated Current J(±1%) <30mOhm J(±5%) <50mOhm	Jumper Max. Overloaded Current J(±1%) <30mOhm J(±5%) <50mOhm
01005	1/32W	15V	30V	-	-200~+600	-	1Ω≤R≤10Ω (only 5%)	0,5A	1A
					±300		10Ω≤R<100Ω		
					±200		100Ω≤R≤10MΩ		
0201	1/20W	25V	50V	-	-100~+350	-	1Ω≤R≤10Ω	0,5A	1A
					±200		10Ω<R≤10MΩ		
0402	1/16W	50V	100V	100V	±800	-	0,1Ω≤R<1Ω	1A	2A
					±200	1Ω≤R≤10Ω	1Ω≤R≤10Ω		
					±100	10Ω<R≤10MΩ	10Ω<R≤10MΩ		
0603	1/10W	75V	150V	300V	±1500	-	0,01Ω≤R≤0,03Ω	1A	2A
					±1000	-	0,03Ω<R≤0,05Ω		
					±800	-	0,05Ω<R<1Ω		
					±200	1Ω≤R≤10Ω	1Ω≤R≤10Ω		
					±100	10Ω<R≤10MΩ	10Ω<R≤10MΩ		
0805	1/8W	150V	300V	500V	±1500	-	0,01Ω≤R≤0,015Ω	2A	5A
					±1000	-	0,015Ω<R≤0,03Ω		
					±800	-	0,03Ω<R<1Ω		
					±200	1Ω≤R≤10Ω	1Ω≤R≤10Ω		
					±100	10Ω<R≤10MΩ	10Ω<R≤10MΩ		
1206	1/4W	200V	400V	500V	±1500	-	0,01Ω≤R≤0,015Ω	2A	10A
					±1000	-	0,015Ω<R≤0,03Ω		
					±800	-	0,03Ω<R<1Ω		
					±200	1Ω≤R≤10Ω	1Ω≤R≤10Ω		
					±100	10Ω<R≤10MΩ	10Ω<R≤10MΩ		
1210	1/2W	200V	500V	500V	±1500	-	0,01Ω≤R≤0,015Ω	2A	10A
					±1000	-	0,015Ω<R≤0,03Ω		
					±800	-	0,03Ω<R<1Ω		
					±200	1Ω≤R≤10Ω	1Ω≤R≤10Ω		
					±100	10Ω<R≤10MΩ	10Ω<R≤10MΩ		
2010	3/4W	200V	500V	500V	±1500	-	0,01Ω≤R≤0,015Ω	2A	10A
					±1000	-	0,015Ω<R≤0,03Ω		
					±800	-	0,03Ω<R<1Ω		
					±200	1Ω≤R≤10Ω	1Ω≤R≤10Ω		
					±100	10Ω<R≤10MΩ	10Ω<R≤10MΩ		
2512	1W	200V	500V	500V	±1500	-	0,01Ω≤R≤0,015Ω	2A	10A
					±1000	-	0,015Ω<R≤0,03Ω		
					±800	-	0,03Ω<R<1Ω		
					±200	1Ω≤R≤10Ω	1Ω≤R≤10Ω		
					±100	10Ω<R≤10MΩ	10Ω<R≤10MΩ		
1812	3/4W	200V	500V	500V	±1500		0,01Ω≤R≤0,015Ω	2A	10A
					±1000		0,015Ω<R≤0,03Ω		
					±800		0,03Ω<R<1Ω		
					±200	1Ω≤R≤10Ω	1Ω≤R≤10Ω		
					±100	10Ω<R≤10MΩ	10Ω<R≤10MΩ		

FrelTec

© FrelTec® GmbH www.freltec.com
Please read cautions and warnings and important notes at the end of this document.

E96 (0,5%, 1%, 2%) 0805 to 2512 (01005, 0201, 0402 no marking)
4 digit marking, first three digits marking are significant figures; forth digit is multiplier (10^X).).
e.g.: 1542 = 154x10²=15.400 Ohm=15,4kOhm
Letter "R" is for decimal point: e.g. 2R2 for 2,2Ohm,
0,01 to 0,099 Ohm 4 Digit, first digit R: e.g. R091 for 0,091Ohm

E24 (5%) 0603 to 2512 (01005, 0201, 0402 no marking)
3 digit marking, first two digits marking are significant figures; third digit is multiplier (10^X). Letter "R" is for decimal point: e.g. 2R2 for 2,2Ohm
examples: 512 = 51×10^2 = 5,1kOhm
0603 E24 1% code is underlined

E96 (0,5%, 1%, 2%) 0603
examples: 12C (Table below) = 130×10^2 = 13kOhm, 000 = 0 Ohm

3 digit Marking Table

Code	E96	Code	E96	Code	E96	Code	E96
01	100	25	178	49	316	73	562
02	102	26	182	50	324	74	576
03	105	27	187	51	332	75	590
04	107	28	191	52	340	76	604
05	110	29	196	53	348	77	619
06	113	30	200	54	357	78	634
07	115	31	205	55	365	79	649
08	118	32	210	56	374	80	665
09	121	33	215	57	383	81	681
10	124	34	221	58	392	82	698
11	127	35	226	59	402	83	715
12	130	36	232	60	412	84	732
13	133	37	237	61	422	85	750
14	137	38	243	62	432	86	768
15	140	39	249	63	442	87	787
16	143	40	255	64	453	88	806
17	147	41	261	65	464	89	825
18	150	42	267	66	475	90	845
19	154	43	274	67	487	91	866
20	158	44	280	68	499	92	887
21	162	45	287	69	511	93	909
22	165	46	294	70	523	94	931
23	169	47	301	71	536	95	953
24	174	48	309	72	549	96	976

Code	A	B	C	D	E	F	G	H	X	Y	Z
Multiplier	10^0	10^1	10^2	10^3	10^4	10^5	10^6	10^7	10^{-1}	10^{-2}	10^{-3}

E24	10	11	12	13	15	16	18	20	22	24	27	30	33	36	39	43	47	51	56	62	68	75	82	91

FrelTec

© FrelTec® GmbH www.freltec.com
Please read cautions and warnings and important notes at the end of this document.

Tape And Reel Package

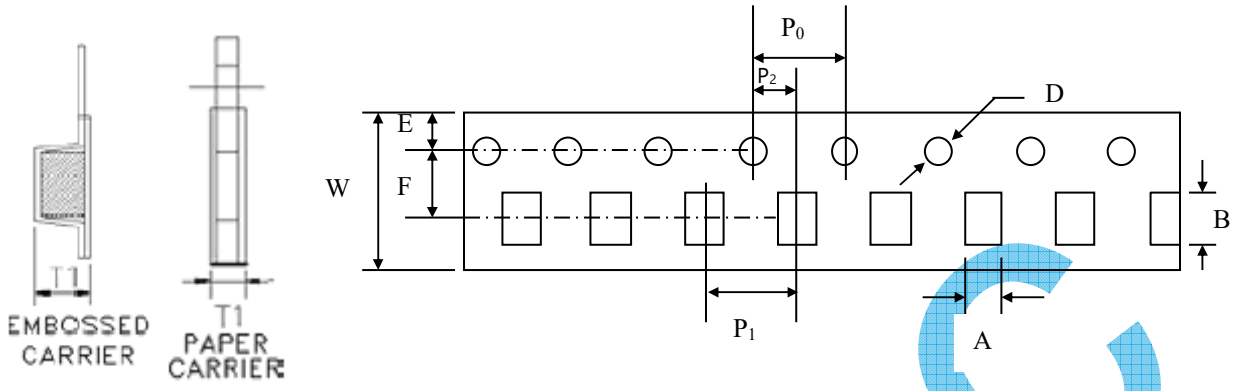

In Accordance with EIA RS-481

Packing	Size	A	B	W	F	E	P_1	P_2	P_0	D	T_1
Paper Tape (T)	01005	0,24±0,05	0,45±0,05	8,0±0,2	3,5±0,05	1,75±0,1	2,00±0,1	2,0±0,05	4,0±0,1	1,5+0,10/-0	0,40±0,1
	0201	0,40±0,05	0,70±0,05	8,0±0,2	3,5±0,05	1,75±0,1	2,00±0,1	2,0±0,05	4,0±0,1	1,5+0,10/-0	0,42±0,1
	0402	0,65±0,1	1,2±0,1	8,0±0,2	3,5±0,05	1,75±0,1	2,00±0,1	2,0±0,05	4,0±0,1	1,5+0,10/-0	0,42±0,05
	0603	1,10±0,2	1,90±0,2	8,0±0,2	3,5±0,05	1,75±0,1	4,00±0,1	2,0±0,05	4,0±0,1	1,5+0,10/-0	0,67±0,1
	0805	1,65±0,2	2,40±0,2	8,0±0,2	3,5±0,05	1,75±0,1	4,00±0,1	2,0±0,05	4,0±0,1	1,5+0,10/-0	0,81±0,1
	1206	2,00±0,2	3,60±0,2	8,0±0,2	3,5±0,05	1,75±0,1	4,00±0,1	2,0±0,05	4,0±0,1	1,5+0,10/-0	0,81±0,1
	1210	2,80±0,2	3,50±0,2	8,0±0,2	3,5±0,05	1,75±0,1	4,00±0,1	2,0±0,05	4,0±0,1	1,5+0,10/-0	0,75±0,1
Embossed Tape (E)	2010	2,90±0,2	5,60±0,2	12,0±0,2	5,5±0,05	1,75±0,1	4,00±0,1	2,0±0,05	4,0±0,1	1,5+0,10/-0	1,0±0,1
	2512	3,50±0,2	6,70±0,2	12,0±0,2	5,5±0,05	1,75±0,1	4,00±0,1	2,0±0,05	4,0±0,1	1,5+0,10/-0	1,0±0,1
	1812	3,50±0,2	4,80±0,2	12,0±0,2	5,5±0,05	1,75±0,1	4,00±0,1	2,0±0,05	4,0±0,1	1,5+0,10/-0	1,0±0,1

Cover tape lead portion: ≥100mm
Carrier Tape lead portion (1st Free run): ≥400mm
Tape end portion(Last Free run): ≥180mm

FrelTec

© FrelTec® GmbH www.freltec.com
Please read cautions and warnings and important notes at the end of this document.

Cover Tape Peel off Strength

Specifications:
1,0~0,7N

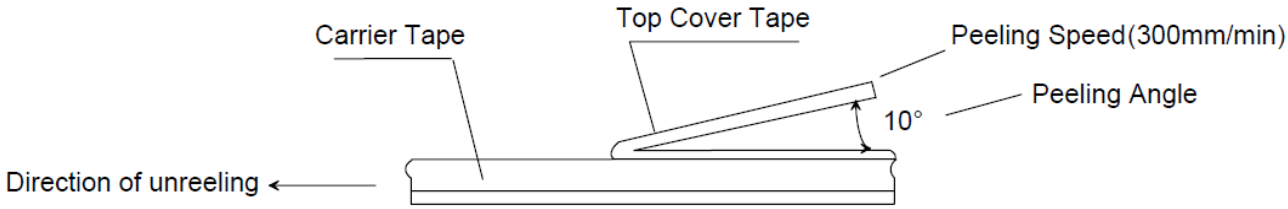

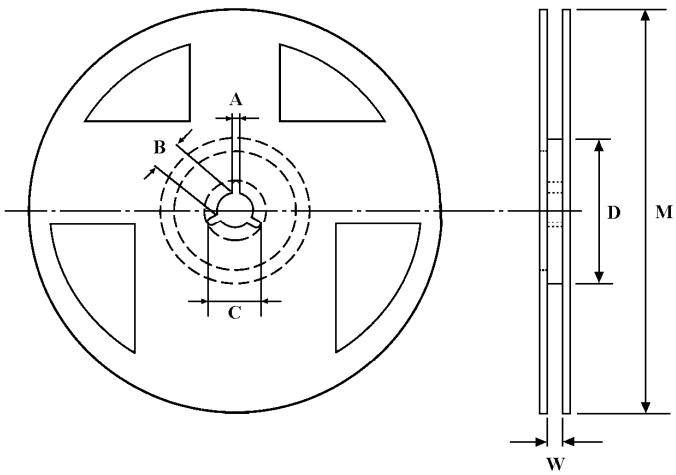

Type	Packaging	A	B	C	D	M	W
015 0A … T20	Paper	2±0,5	13±0,5	21±0,5	60±1	178±2	10±1
015 01 … T15							
015 02 … T10							
015 03 … T05							
015 05 … T05							
015 06 … T05							
015 10 … T05							
015 20 … E04	Embossed						13,8±1
015 25 … E04							
015 12 … E04							

Stock period

The Temperature condition must be controlled at 25± 5 °C, the R.H. must be controlled at 60±10% in chemical and dust free atmosphere. The stock can maintain quality level in one year.

Within the above guarantee periods, do not store these products in the following conditions, otherwise, their electrical performance and/or solderability may be deteriorated, and the packaging materials (e.g. taping materials) may be deformed or deteriorated, resulting in mounting failures:

- In salty air or in air with a high concentration of corrosive gas, such as Cl_2, H_2S, NH_3, SO_2, or NO_2
- In direct sunlight

© FrelTec® GmbH www.freltec.com
Please read cautions and warnings and important notes at the end of this document.

Lead Free Reflow Soldering Profile

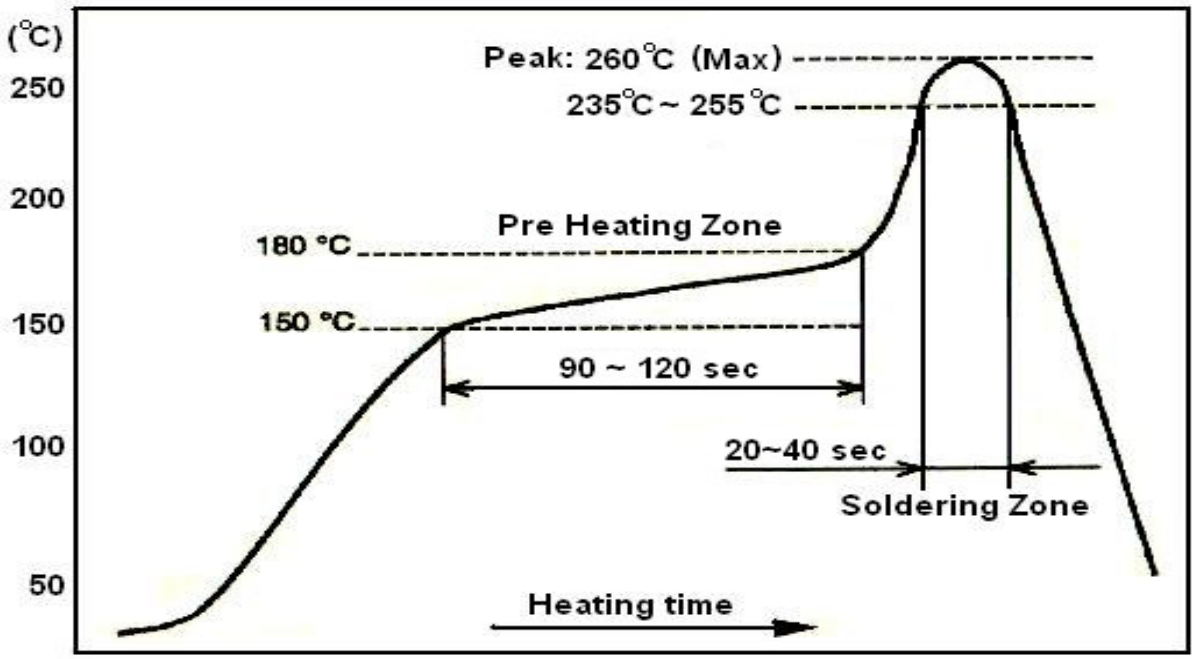

Temperature profile for avaluation

Soldering Iron: temperature should be less than 300°C, maximum contract time should be 5 sec.

Recommended Land Pattern Design (For Reflow Soldering):

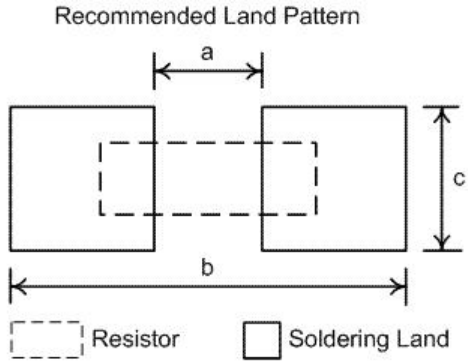

Size	a (mm.)	b (mm.)	c (mm.)
0201	0,3 to 0,4	0,8 to 0,9	0,25 to 0,35
0402	0,5 to 0,6	1,4 to 1,6	0,4 to 0,6
0603	0,7 to 0,9	2,0 to 2,2	0,8 to 1,0
0805	1,0 to 1,4	3,2 to 3,8	0,9 to 1,4
1206	2,0 to 2,4	4,4 to 5,0	1,2 to 1,8
1210	2,0 to 2,4	4,4 to 5,0	1,8 to 2,8
2010	3,6 to 4,0	6,2 to 7,0	1,8 to 2,8
2512	3,6 to 4,0	7,6 to 8,6	2,3 to 3,5
1812	3,4 to 3,8	6,0 to 6,8	2,3 to 3,5

© FrelTec GmbH

Please read cautions and warnings and important notes at the end of this document.

Reliability Test

Electrical Performance Test

ITEM	SPECIFICATION Resistor	TEST METHOD
Short time Overload	0,5%, 1%: ΔR ± (1,0% + 0,1Ω) Max 2%, 5%: ΔR ± (2,0% + 0,1Ω) Max	**JIS C 5201-1 4.13** Permanent resistance change after the application of a potential of 2,5 times RCWV for 5s
Temperature Coefficient of Resistance (TCR)	Refer to general specification above	**JIS C 5201-1 4.8** Natural resistance change per temp. degree centigrade. $TCR(ppm/°C) = \frac{R2-R1}{R1} \cdot \frac{1}{T2-T1} \cdot 10^6$ R1: Resistance value at room temperature (T1) R2: Resistance value at room temp. plus 100°C (T2) T1: Room temperature T2: Room temperature plus 100°C
Insulation Resistance[1]	1000MΩ or more	**JIS C 5201-1 4.6** Apply 500V DC between protective coating and termination for 1 min, then measure
Dielectric Withstand Voltage[1]	No evidence of flashover mechanical damage, arcing or insulation break down	**JIS C 5201-1 4.7** Apply 0805 and bigger 500V AC (0402) 100V, 0603 300V) AC between protective coating and termination for 1 minute then measure
Solderability[1]	Solder coverage over 95%	**JIS-C5201-1 4.17** Test temperature of solder : 245 ± 3℃ Dipping them solder : 2-3 s
Soldering temp. reference[1]	Electrical characteristics shall be satisfied. Without distinct deformation in appearance. (95 % coverage Min.)	**Wave soldering condition: (2 cycles Max.)** Pre-heat: 100 ~ 120°C, 30 ± 5 s. Suggestion solder temp.: 235 ~ 255°C, 10 s. (Max.) Peak temp.: 260°C **Reflow soldering condition: (2 cycles Max.)** Pre-heat: 150 ~ 180°C, 90 ~ 120 s. Suggestion solder temp.: 235 ~ 255°C, 20 ~ 40 s. Peak temp.: 260°C 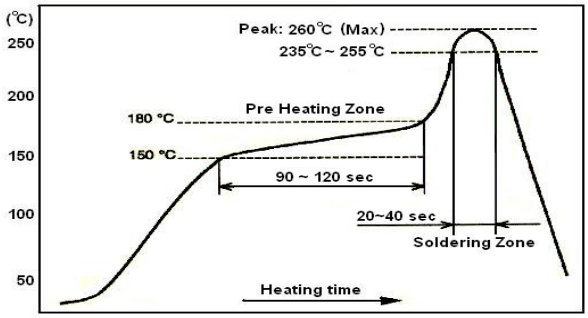 Temperature profile for avaluation **Hand soldering condition:** The soldering iron tip temperature should be less than 300°C and maximum contract time should be 5 sec.
Resistance to soldering heat	Resistance change rate ΔR ± (1,0% + 0,05Ω) Max	**JIS-C5201-1 4.18** Dip the resistor into a solder bath having a temperature of 260°C±3°C and hold it for 10±1 s.
Terminal bending	Resistance change rate ΔR ± (1,0% + 0,05Ω) Max	**JIS-C5201-1 4.33** Twist of Test Board: Y/X = 5/90 mm for 10 s

© FrelTec® GmbH www.freltec.com
Please read cautions and warnings and important notes at the end of this document.

Environmental Test

<table>
<tr><th rowspan="2">ITEM</th><th>SPECIFICATION</th><th rowspan="2">TEST METHOD</th></tr>
<tr><th>Resistor</th></tr>
<tr><td>Temperature cycling</td><td>Resistance change rate
0,5%, 1%: ± (0,5%+0,05Ω) Max
2%, 5%: ± (1,0% + 0,05Ω) Max</td><td>JIS-C5201-1 4.19
Resistance change after continuous 100 cycles for duty cycle specified below:
<table>
<tr><th>Step</th><th>Temperature</th><th>Time</th></tr>
<tr><td>1</td><td>-55±5°C</td><td>30 min</td></tr>
<tr><td>2</td><td>Room temp.</td><td>10~15 min</td></tr>
<tr><td>3</td><td>+155±2°C</td><td>30 min</td></tr>
<tr><td>4</td><td>Room temp.</td><td>10~15 min</td></tr>
</table></td></tr>
<tr><td>Loading Life in Humidity</td><td>Resistance change rate
0,5%, 1%: ± (1,0%+0,1Ω) Max
2%, 5%: ± (3,0%+0,1Ω) Max</td><td>JIS-C5201-1 4.24.2.1
Resistance change after 1,000 h (1,5 h "on", 0,5 h "off") at RCWV in a humidity chamber controlled at 40°C ± 2°C and 90 to 95 % relative humidity</td></tr>
<tr><td>Load Life</td><td>Resistance change rate
0,5%, 1%: ± (1,0%+0,1Ω) Max
2%, 5%: ± (3,0% + 0,10Ω) Max</td><td>JIS-C5201-1 4.25.1
Permanent resistance change after 1,000 hours operating at RCWV, with duty cycle of (1,5 hours "on", 0,5 hours "off") at 70°C ± 2°C ambient</td></tr>
</table>

[1] For Jumper

FrelTec

© FrelTec® GmbH www.freltec.com
Please read cautions and warnings and important notes at the end of this document.

Published by FrelTec®
Mathildenstr. 10A; 82319 Starnberg; Germany
© 2023 FrelTec®. All Rights Reserved.

The following applies to all products named in this publication:

1. The information describes the type of component and shall not be considered as assured characteristics.
2. Terms of delivery and rights to change design reserved.
3. Some parts of this publication contain statements about the suitability of our products for certain areas of application. These statements are based on our knowledge of typical requirements that are often placed on our products in the areas of application concerned. Nevertheless, we explicitly point out that such statements cannot be regarded as binding statements about the suitability of our products for a particular customer application. As a rule, FrelTec® is either unfamiliar with individual customer applications or less familiar with them than the customers themselves. For these reasons, it is always ultimately incumbent on the customer to check and decide whether a FrelTec® product with the properties described in the product specification is suitable for use in a particular customer application.
4. We also point out that in individual cases, a malfunction of electronic components or failure before the end of their usual service life cannot be completely ruled out in the current state of the art, even if they are operated as specified. In customer applications requiring a very high level of operational safety and especially in customer applications in which the malfunction or failure of an electronic component could endanger human life or health (e.g. in accident prevention or life-saving systems), it must therefore be ensured by means of suitable design of the customer application or other action taken by the customer (e.g. installation of protective circuitry or redundancy) that no injury or damage is sustained by third parties in the event of malfunction or failure of an electronic component.
5. The warnings, cautions and product-specific notes must be observed.
6. In order to satisfy certain technical requirements, some of the products described in this publication may contain substances subject to restrictions in certain jurisdictions (e.g. because they are classed as “hazardous”). Useful information on this will be found in our Material Data Sheets. Should you have any more detailed questions, please contact our sales offices.
7. We constantly strive to improve our products. Consequently, the products described in this publication may change from time to time. The same is true for the corresponding product specifications. Please check therefore to what extent product descriptions and specifications contained in this publication are still applicable before or when you place an order. We also reserve the right to discontinue production and delivery of products. Consequently, we cannot guarantee that all products named in this publication will always be available.
8. Unless otherwise agreed in individual contracts, all orders are subject to the current version of the “General conditions for the supply of products and services of the electrical and electronics industry” published by the German Electrical and Electronics Industry Association (ZVEI), available at www.freltec.com.
9. As far as patents or other rights of third parties are concerned, liability is only assumed for components per se, not for applications, processes and circuits implemented within components or assemblies.
10. The trade name FrelTec® is a trademark registered or pending in Europe and in other countries.

FrelTec