FrelTec

Mathildenstr. 10A
82319 Starnberg
Germany

100V N-Channel MOSFET
TO-220AB

Freltec

© FrelTec GmbH

Please read cautions and warnings and important notes at the end of this document.

TO-220AB

100V N-Channel MOSFET

SPECIFICATION

65B		SSF1020xxx		T220		Y0F
Type		Type		Package		Packing
65B: MOSFET		SSF1020		TO-220AB		Y0F: pack in Tube for 50 pc

All products according to RoHS (2015/863/EU)

Freltec

© FrelTec® GmbH
www.freltec.com
Please read cautions and warnings and important notes at the end of this document.

PACKAGE OUTLINE

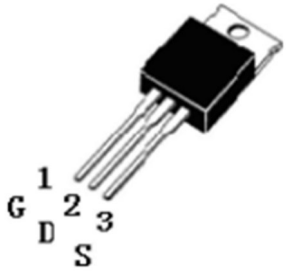

SSF1020 Top View (TO-220)

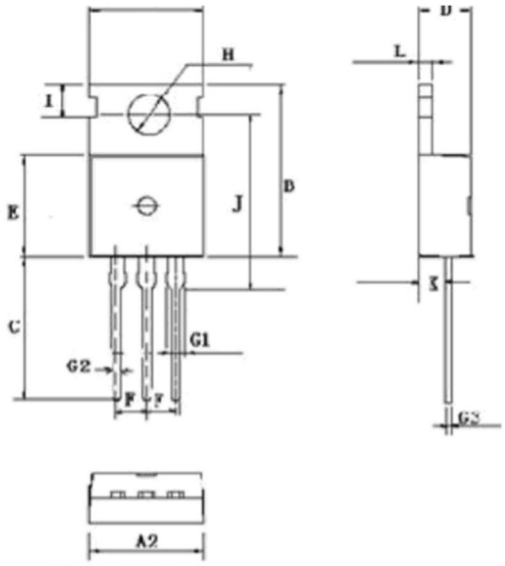

TO-220 3L

SYMBOL	DIMENSIONS
A(mm)	9.66~10.28
A2(mm)	9.80~10.20
B(mm)	15.6~15.8
C(mm)	12.70~14.27
D(mm)	4.30~4.70
E(mm)	8.59~9.40
F(mm)	2.54 (nom)
G1(mm)	1.42~1.62
G2(mm)	0.70~0.95
G3(mm)	0.45~0.60
H(mm) dia.	3.50~3.70
I(mm)	2.7~2.9
J(mm)	15.70~16.25
K(mm)	2.20~2.90
L(mm)	1.15~1.40
M(mm)	0.5

© FrelTec® GmbH
www.freltec.com
Please read cautions and warnings and important notes at the end of this document.

TO-220AB

100V N-Channel MOSFET

Maximum Ratings & Thermal Characteristics
Ratings at 25°C ambient temperature unless otherwise specified

	Parameter	Max.	Unit
I_D @ T_C=25°C	Continuous drain current , VGS @ 10V	60	A
I_D @ T_C=100°C	Continuous drain current , VGS @ 10V	50	
I_{DM}	Pulsed drain current ①	240	
P_D @ TC=25°C	Power dissipation	180	W
	Linear derating factor	2,0	W/°C
V_{GS}	Gate-to-Source voltage	±20	V
E_{AS}	Single pulse avalanche energy @ L=1,28mH	240	mJ
E_{AR}	Repetitive avalanche energy	TBD	
IAS	Avalanche current @ L=1,28mH	30	A
T_J T_{STG}	Operating junction and storage temperature range	-55 to + 175	°C

Thermal Resistance

	Parameter	Min.	Type	Max.	Units
$R_{\theta JC}$	Junction to case	-	0,83	-	°C/W
$R_{\theta JA}$	Junction to ambient(t ≤ 10s)	-	-	62	

Electrical Characteristics @ T_J=25°C(Unless other specified)

	Parameter	Min.	Typ.	Max.	Units	Test Conditions
BV_{DSS}	Drain-to-Source breakdown voltage	100	-	-	V	V_{GS}=0V, I_D=250uA
$R_{DS(on)}$	Static Drain-to-Source on – resistance	-	16	20	mΩ	V_{GS}=10V, I_D=30A
$V_{GS(th)}$	Gate threshold voltage	2,0	3,0	4,0	V	V_{DS}=V_{GS}, I_D=250uA
g_{fs}	Forward transconductance	-	58	-	S	V_{DS}=5V, I_D=30uA
I_{DSS}	Drain-to-Source leakage current	-	-	1	uA	V_{DS}=100V, V_{GS}=0V
		-	-	10		V_{DS}=100V, V_{GS}=0V,T_J=150°C
I_{GSS}	Gate-to-Source forward leakage	-	-	100	nA	V_{GS}=20V
	Gate-to-Source reverse leakage	-	-	-100		V_{GS}=-20V
Q_g	Total gate charge	-	90	-	nC	I_D=30A, V_{DS}=30V, V_{GS}=10V
Q_{gs}	Gate-to-Source charge	-	14	-		
Q_{gd}	Gate-to-Drain("Miller") charge	-	24	-		

© FrelTec® GmbH www.freltec.com
Please read cautions and warnings and important notes at the end of this document.

$T_{d(on)}$	Turn-on-delay time	-	18,2	-	nS	V_{DD}=30V, ID=2A, RL=15Ω, REGN=2,5Ω V_{GS}=10V
t_r	Rise time	-	15,6	-		
$T_{d(off)}$	Turn-off-delay time	-	70,5	-		
t_f	Fall time	-	13,8	-		
C_{iss}	Input capacitance	-	3150	-	pF	V_{GS}=0V V_{DS}=25V F=1,0MHz
C_{oss}	Output capacitance	-	300	-		
C_{rss}	Reverse transfer capacitance	-	240	-		

Source-Drain Ratings and Characteristics

	Parameter	Min.	Typ.	Max.	Units	Test Conditions
I_S	Continuous Source Current (Body diode)	-	-	60	A	MOSFET symbol Showing the Integral reverse p-n junction diode. 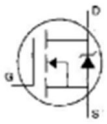
I_{SM}	Pulsed Source Current (Body diode)	-	-	240		
V_{SD}	Diode Forward Voltage	-	-	1,3	V	T_J=25°C, I_S=30A, VGS=0V③
T_{rr}	Reverse Recovery Time	-	57	-	ns	T_J=25°C, I_F=60A, di/dt=100A/us ③
Q_{rr}	Reverse Recovery Charge	-	107	-	nC	
t_{ON}	Forward turn-on time	Intrinsic turn-on time is negligible(turn-on is dominated by LS + LD)				

Notes:

① Repetitive rating; pulse width limited by max. junction temperature.

② Test condition: L= 0,3mH, ID=40A, VDD=50V

③ Pulse width ≤ 300us, duty cycle ≤ 1,5%, RG= 25Ω, Starting T_J=25°C

EAS test circuit

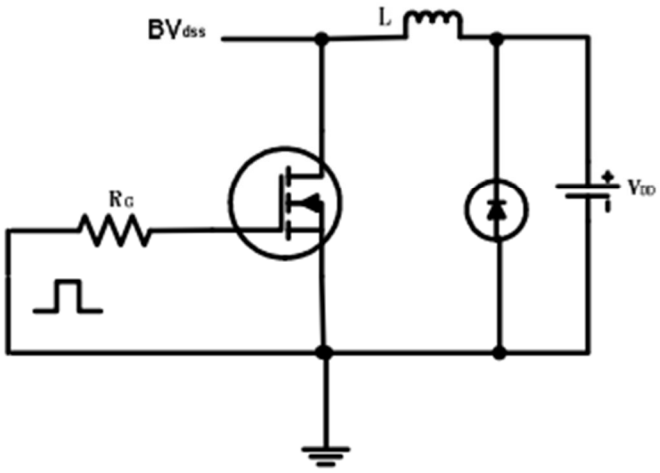

Gate charge test circuit

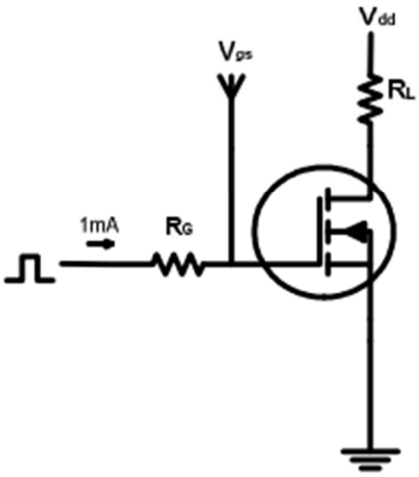

© FrelTec® GmbH

www.freltec.com

Please read cautions and warnings and important notes at the end of this document.

Typical Electrical and Thermal Characteristics

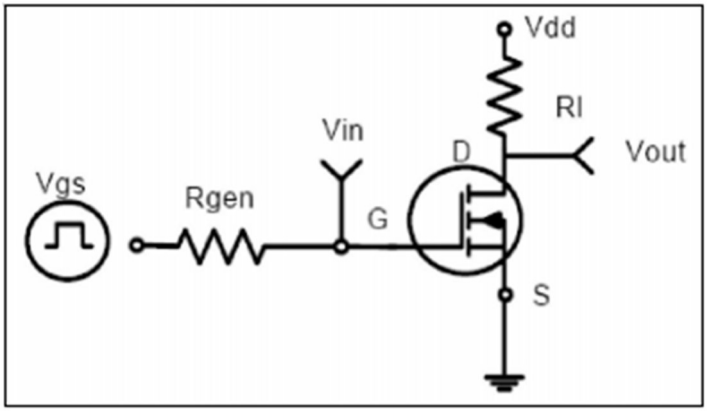

Switch Time Test Circuit:

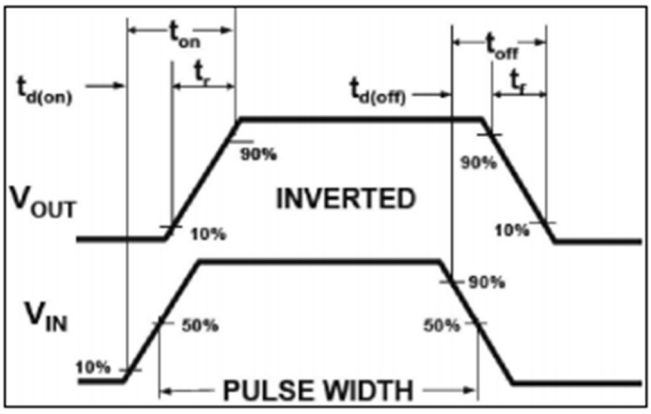

Switch Waveforms:

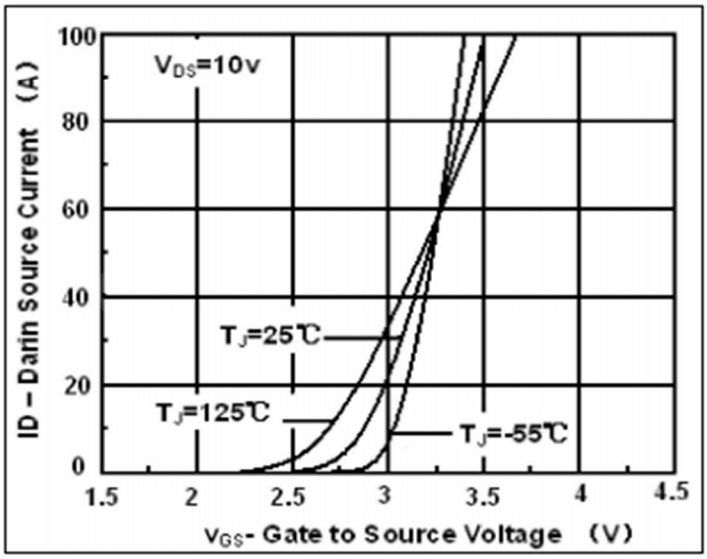

Transfer Characteristic

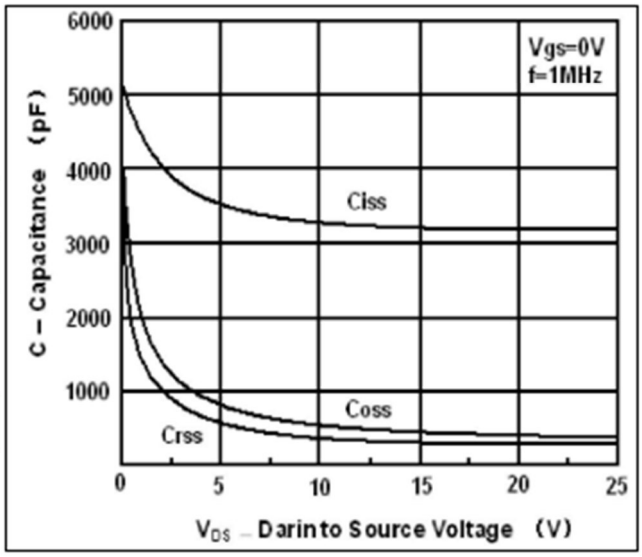

Capacitance

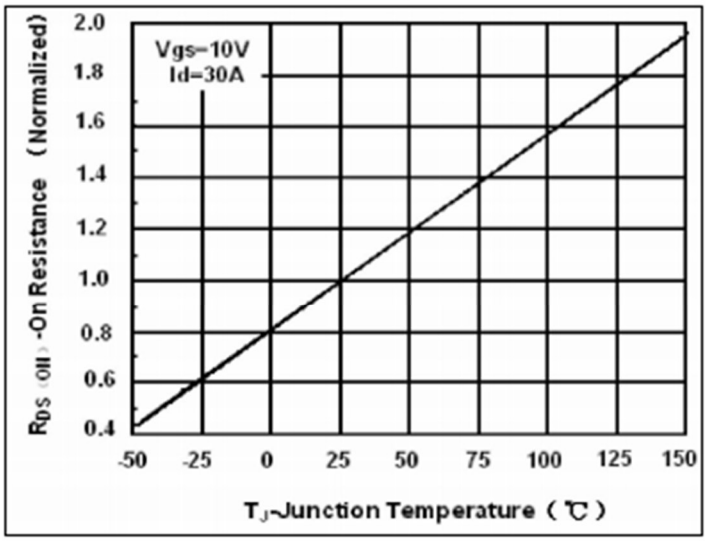

On Resistance vs. Junction Temperature

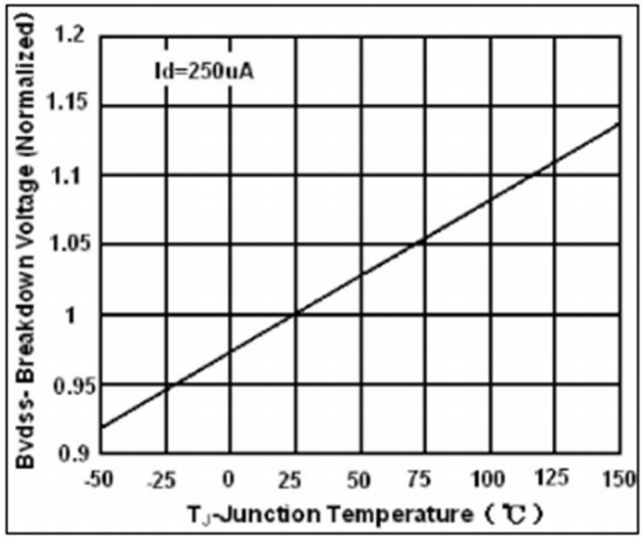

Breakdown Voltage vs. Junction Temperature

© FrelTec® GmbH

www.freltec.com

Please read cautions and warnings and important notes at the end of this document.

TO-220AB

100V N-Channel MOSFET

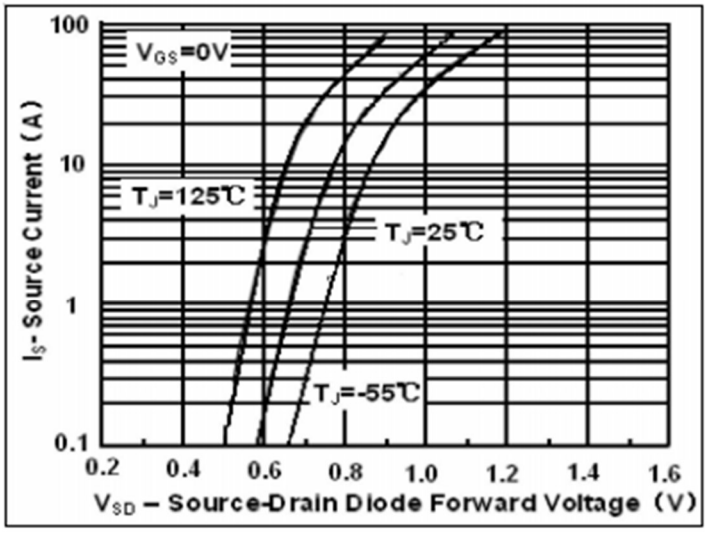

Source-Drain Diode Forward Voltage

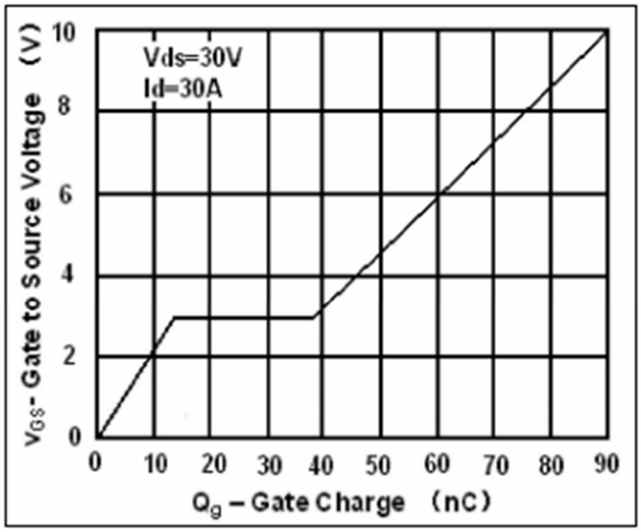

Gate Charge

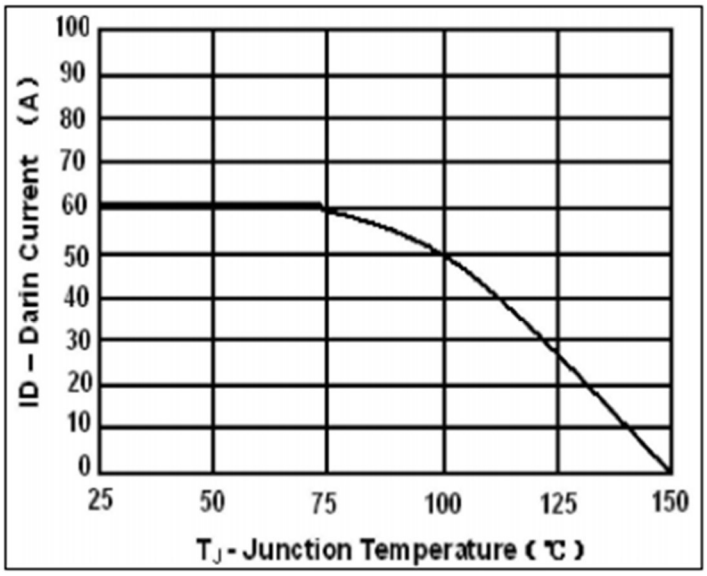

Max Drain Current vs. Junction Temperature

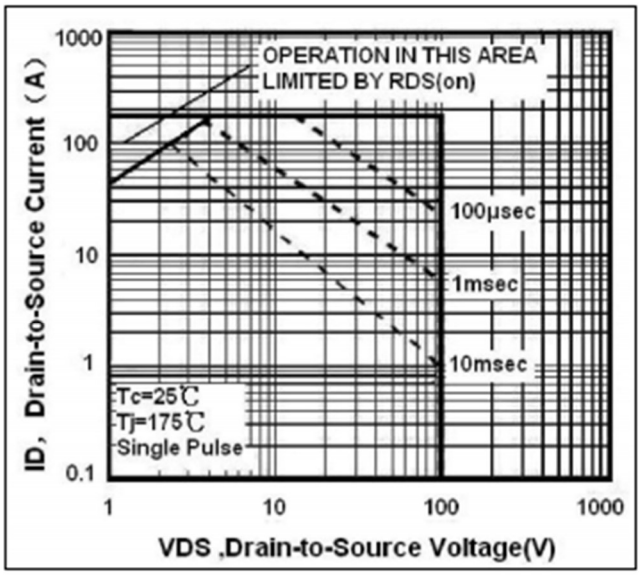

Safe Operation Area

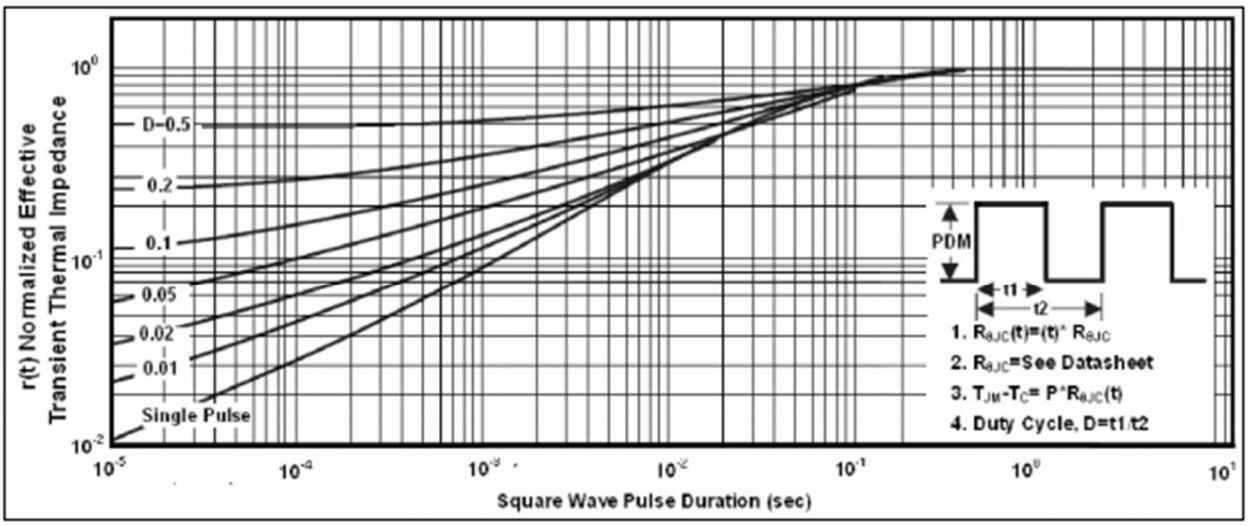

Transient Thermal Impedance Curve

© FrelTec® GmbH
www.freltec.com
Please read cautions and warnings and important notes at the end of this document.

SPECIFICATION

TUBE Package

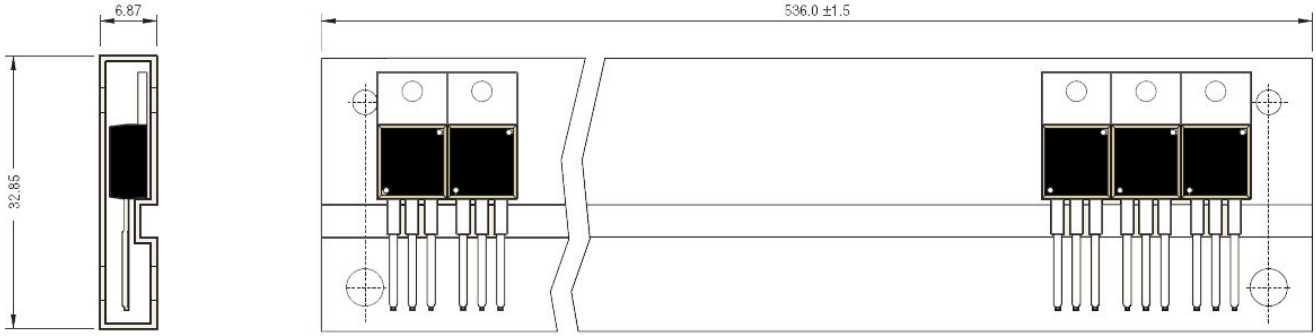

Qty: 50 Pcs/Tube

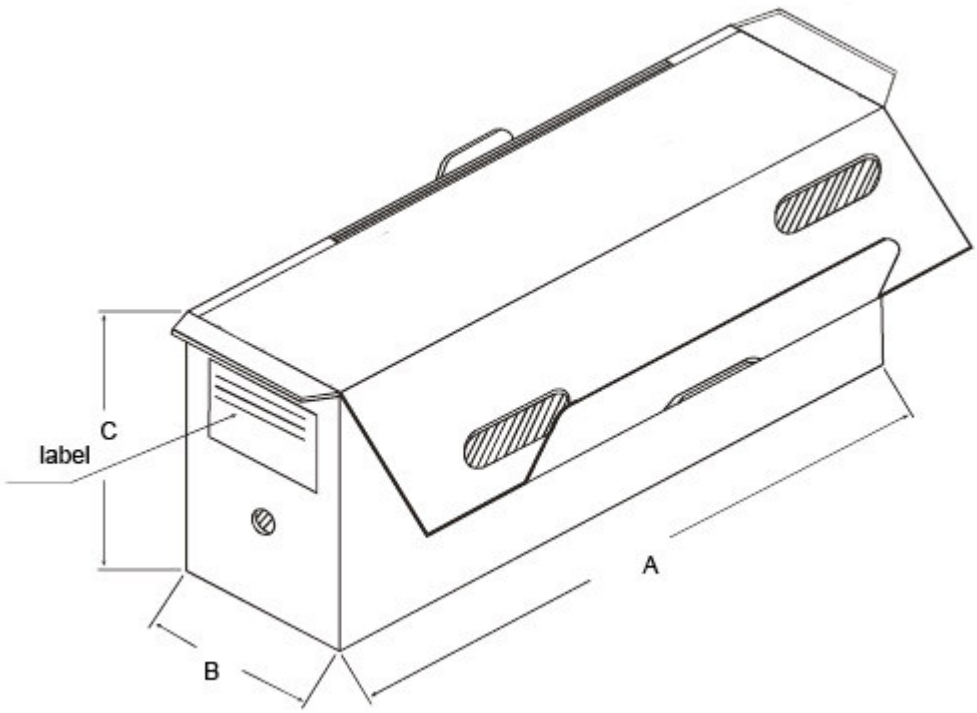

Packaging	Available Product Outlines	Dimension "A"	Dimension "B"	Dimension "C"	Quantity Box
TUBE PACK	TO220	540mm	170mm	78mm	1000 PCS

© FrelTec® GmbH
www.freltec.com
Please read cautions and warnings and important notes at the end of this document.

Soldering Parameters

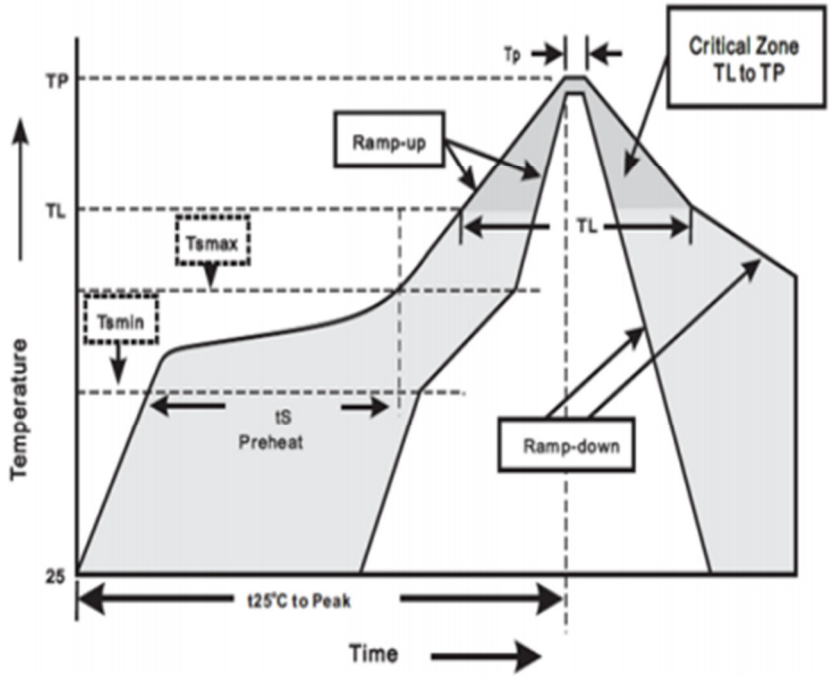

Stock period
The performance of these products, including the solderability, is guaranteed for 12 month, provided that they remain packed as they were when delivered and stored at a temperature of 20-30°C and a relative humidity 20-60%RH

© FrelTec® GmbH
www.freltec.com
Please read cautions and warnings and important notes at the end of this document.

Published by FrelTec® GmbH
Mathildenstr, 10A; 82319 Starnberg; Germany
© 2022 FrelTec® GmbH, All Rights Reserved,

The following applies to all products named in this publication:

1. The information describes the type of component and shall not be considered as assured characteristics,
2. Terms of delivery and rights to change design reserved,
3. Some parts of this publication contain statements about the suitability of our products for certain areas of application, These statements are based on our knowledge of typical requirements that are often placed on our products in the areas of application concerned, Nevertheless, we explicitly point out that such statements cannot be regarded as binding statements about the suitability of our products for a particular customer application, As a rule, FrelTec® is either unfamiliar with individual customer applications or less familiar with them than the customers themselves, For these reasons, it is always ultimately incumbent on the customer to check and decide whether a FrelTec® product with the properties described in the product specification is suitable for use in a particular customer application,
4. We also point out that in individual cases, a malfunction of electronic components or failure before the end of their usual service life cannot be completely ruled out in the current state of the art, even if they are operated as specified, In customer applications requiring a very high level of operational safety and especially in customer applications in which the malfunction or failure of an electronic component could endanger human life or health (e,g, in accident prevention or life-saving systems), it must therefore be ensured by means of suitable design of the customer application or other action taken by the customer (e,g, installation of protective circuitry or redundancy) that no injury or damage is sustained by third parties in the event of malfunction or failure of an electronic component,
5. The warnings, cautions and product-specific notes must be observed,
6. In order to satisfy certain technical requirements, some of the products described in this publication may contain substances subject to restrictions in certain jurisdictions (e,g, because they are classed as “hazardous”), Useful information on this will be found in our Material Data Sheets, Should you have any more detailed questions, please contact our sales offices,
7. We constantly strive to improve our products, Consequently, the products described in this publication may change from time to time, The same is true for the corresponding product specifications, Please check therefore to what extent product descriptions and specifications contained in this publication are still applicable before or when you place an order, We also reserve the right to discontinue production and delivery of products, Consequently, we cannot guarantee that all products named in this publication will always be available,
8. Unless otherwise agreed in individual contracts, all orders are subject to the current version of the “General conditions for the supply of products and services of the electrical and electronics industry” published by the German Electrical and Electronics Industry Association (ZVEI), available at www,freltec,com,
9. As far as patents or other rights of third parties are concerned, liability is only assumed for components per se, not for applications, processes and circuits implemented within components or assemblies,
10. The trade name FrelTec® is a trademark registered or pending in Europe and in other countries,

FrelTec